KINNEY®

Dry Claw Vacuum Pumps

Kinney® KVC Vacuum Pumps

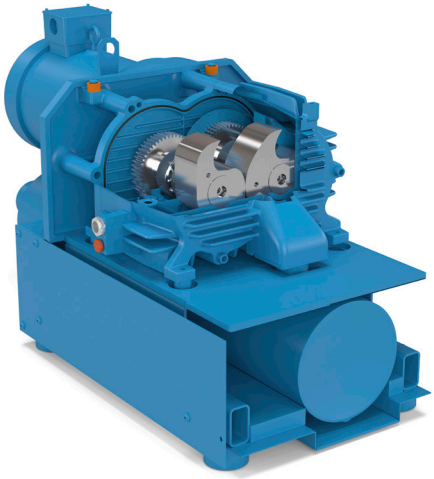

Kinney | www.kinneyvacuum.com | (800) 825-6937

Kinney KVC Market Solutions

MD-Kinney now proudly offers KVC Series dry claw vacuum pumps in the Kinney Vacuum portfolio. The KVC Series claw pumps offer a compact footprint requiring a minimal amount of floor space. Contactless operation means minimal wearing parts and maintenance needed, and oil-free compression. The KVC claw pumps have a highly efficient design for not only energy efficiency, but also efficiency for CFM per HP.

Kinney claw pumps require minimal floor space and are very easy to install. Combined with extremely minimal service, this product is the perfect fit for wide range of application and markets.

Dry claw pump rotors.

Markets

Woodworking

Medical

Food & Beverage

Automotive

Plastics

Applications

Pick & Place

CNC Router Tables

Industrial Vacuum

Central Vacuum Systems

Thermoforming

Food Packaging

Degasification

Contact Free Efficiency

The KVC Series is a contact free dry screw vacuum pump that operates efficiently and economically. The claw pump has two claw-shaped rotors, turning in opposite directions from one another. These rotors are timed and synchronized using a high-performance gearbox. As the rotors turn, the claw travels over the suction connection, pulling inlet gas into the compression chamber. As rotors continue to rotate, gas moves from the suction side to the pressure side. It is then compressed by the reduction of volume between the rotors. During this process, the discharge channel is temporarily sealed by the lower rotor. The gas then travels out the discharge channel once it reaches maximum compression.

Performance Specifications

Model	Nominal Displacement	Ultimate Pressure	Motor	Rotation Speed	Oil Capacity	Pump Weight *Includes Motor*	Noise Level Max
	CFM / m3/hr	Torr / mbar	60Hz HP / 50Hz kW	60Hz / 50Hz	Gal. / Liters	Lbs. / kg	dB(A)
KVC-60	50Hz 35.3 / 60 60Hz 42.4 / 72	75 / 100	2 / 1.1	3450 / 2850	.1 / .4	136 / 62	80
KVC-100	50Hz 58.9 / 100 60Hz 70.6 / 120	113 / 150	3 / 2.2	3450 / 2850	.15 / .55	254 / 115	82
KVC-150	50Hz 88.3 / 150 60Hz 106 / 80	75 / 100	5 / 3.0	3450 / 2850	.16 / .6	309 / 140	82
KVC-251	50Hz 88.3 / 210 60Hz 150 / 255	150 / 200	7.5 / 4.0	3450 / 2850	.16 / .6	327 / 164	78
KVC-301	50Hz 170 / 290 60Hz 205 / 350	113 / 150	7.5 / 5.5	3550 / 2950	.4 / 1.5	612 / 278	77
KVC-401	50Hz 240 / 408 60Hz 285 / 485	150 / 200	12 / 7.5	3550 / 2950	.5 / 1.8	930 / 442	81
KVC-501	50Hz 295 / 501 60Hz 355 / 603	150 / 200	15 / 11	3550 / 2950	.5 / 1.8	1118 / 512	81
KVC-1000	50Hz 559 / 950 60Hz 671 / 1140	150 / 200	30 / 18.5	3550 / 2950	.7 / 2.7	1803 / 818	83

KVC Claw Features
(KVC301 Model Shown)

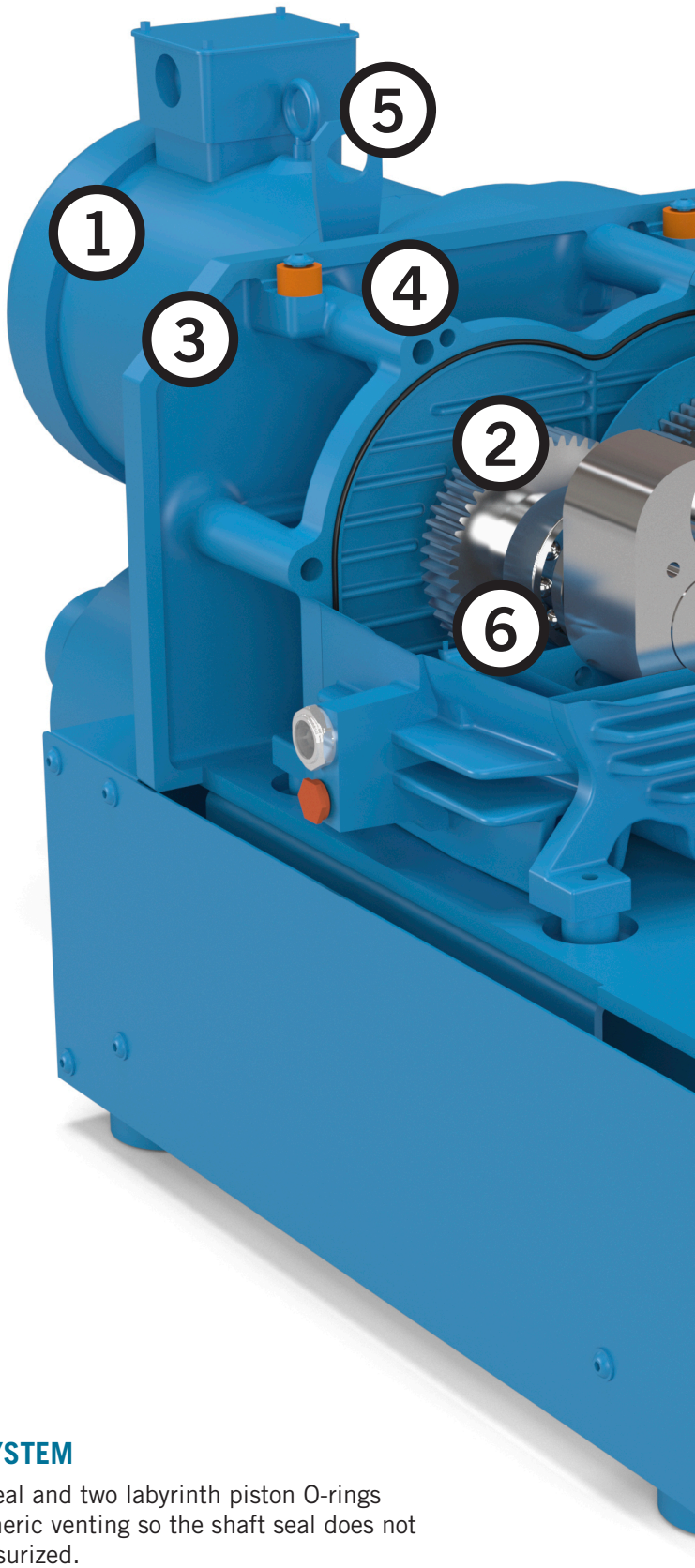

1. NEMA PREMIUM MOTOR

High Efficiency NEMA framed motors included and are compatible with Variable Speed Drives.

2. OIL-FREE COMPRESSION

No contaminants released into the discharge air or process. Providing peace of mind and worry-free maintenance.

3. AIR COOLED

Pump Cooling Fan linked to the drive motor, as well as vent cover openings to keep the unit cool.

4. FULLY SYNCHRONIZED GEARS

These gears are synchronized to ensure maximum efficiency in rotor movement. The gearbox is lubricated by Kinney KV-150 premium gear lubricant.

5. LIFTING EYEBOLT

Lifting eyebolt for easy transport and placement. The pumping unit can be lifted and removed from the pump assembly frame and easily repaired during service intervals.

6. SEALING SYSTEM

Viton shaft seal and two labyrinth piston O-rings with atmospheric venting so the shaft seal does not become pressurized.

13. SMALL FOOTPRINT

Unique stacked design enables a reduction of required floor space.

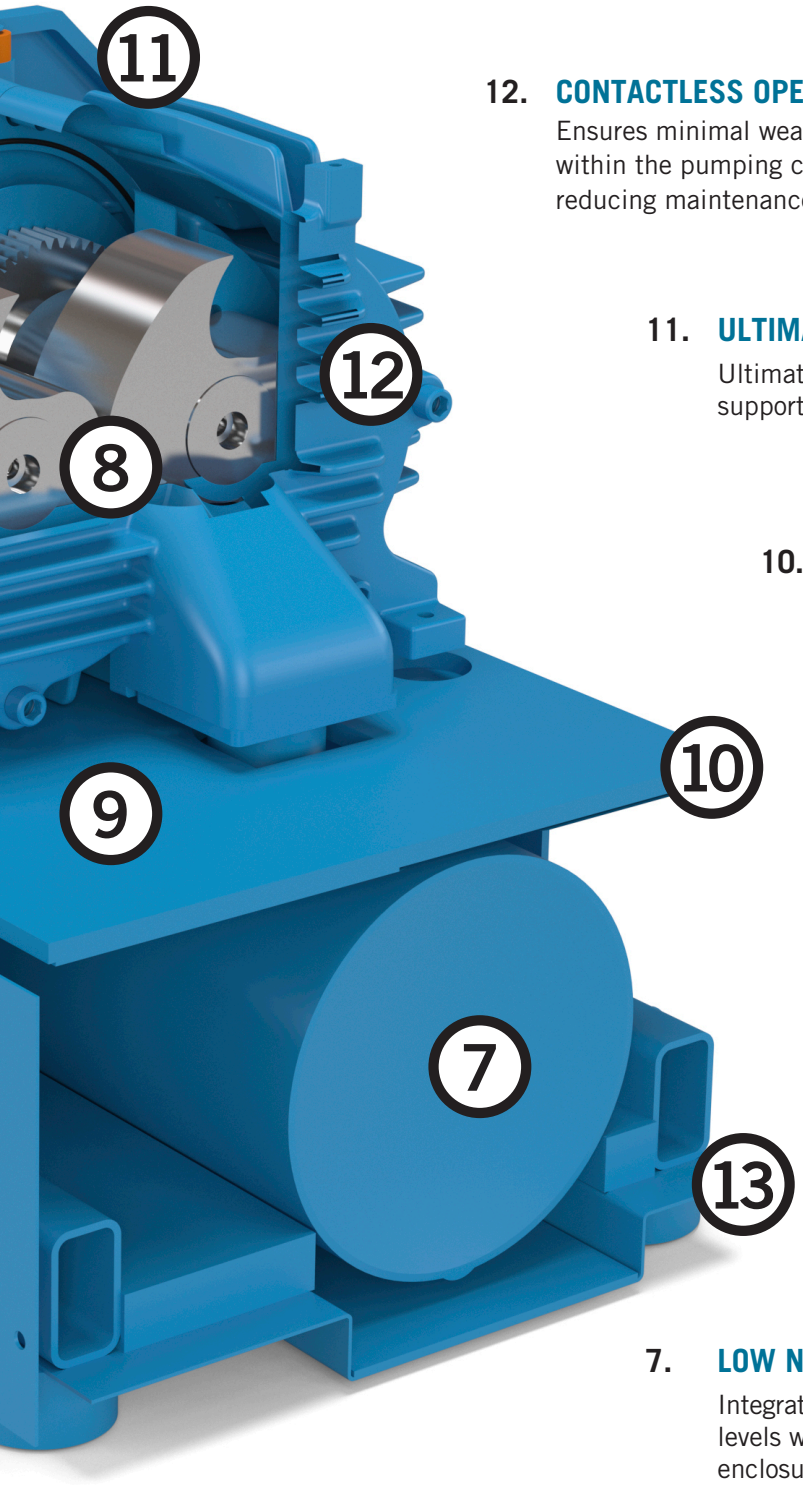

12. CONTACTLESS OPERATION

Ensures minimal wear of parts within the pumping chamber, reducing maintenance downtime.

11. ULTIMATE VACUUM DOWN TO 27”HG

Ultimate Vacuum down to 27”Hg / 75 Torr to support your application.

10. LOW MAINTENANCE

Service/Maintenance intervals up to 20,000 hrs. This leads to low cost of ownership and nearly a “set & forget” product.

9. HIGH EFFICIENCY

Top of class CFM/HP efficiency and low power consumption due to our overall rotor and cylinder designs.

8. HORIZONTAL SHAFT

Optimized lubrication, better heat extraction, dissipation, and extended life of gears, bearings, and seals.

7. LOW NOISE

Integrated internal discharge silencer offers some of the lowest sound levels with this technology and combined with the Kinney base and enclosure design features, can achieve sound levels as low as 76 dB(A).

Benefits That Optimize Your Process

Kinney KVC Claw Pumps

The KVC Claw series serves a variety of applications where high-volume air is required in applications up to 27 in. HgV (75 Torr) for continuous operation. There are several pumps with capacity ranges from 43 to 671 CFM.

Reliable and Efficient Design

The design of the KVC Series allows for dry compression, meaning no oil or sealing fluid is needed in the compression chamber. This also provides much less wear in the operation. The KVC design optimizes air flow for efficient air cooling. Along with the use of our premium motors, the Kinney design greatly reduces energy consumption and consequently lowers life cycle costs.

The Kinney KVC design excels in efficiency of higher CFM per HP by optimizing the relationship between the shape, size, and precision of the rotors and port design.

Compact Design and Low Noise Levels

The compact design for the KVC Claw pump allows for the most efficient use of installation space and provides easy access to all components of the machine, making it easy to inspect and service. The KVC can perform at market leading sound levels, down to 76 dB(A) during operation.

Claw Rotors

Our Claw shaped rotors are designed for contactless operation and are expertly designed for the tightest fitting tolerances which provides the highest efficiency in claw compression. None of the internal components make contact, extending the service interval and keeps the pump running longer. The Claws are designed to pass through small dry particles without impeding operation. The claw rotors are coated with a dry film that offers corrosion protection and is ideal for moist applications such as drying processes. It also repels dust and dirt and is a barrier against unwanted material entry.

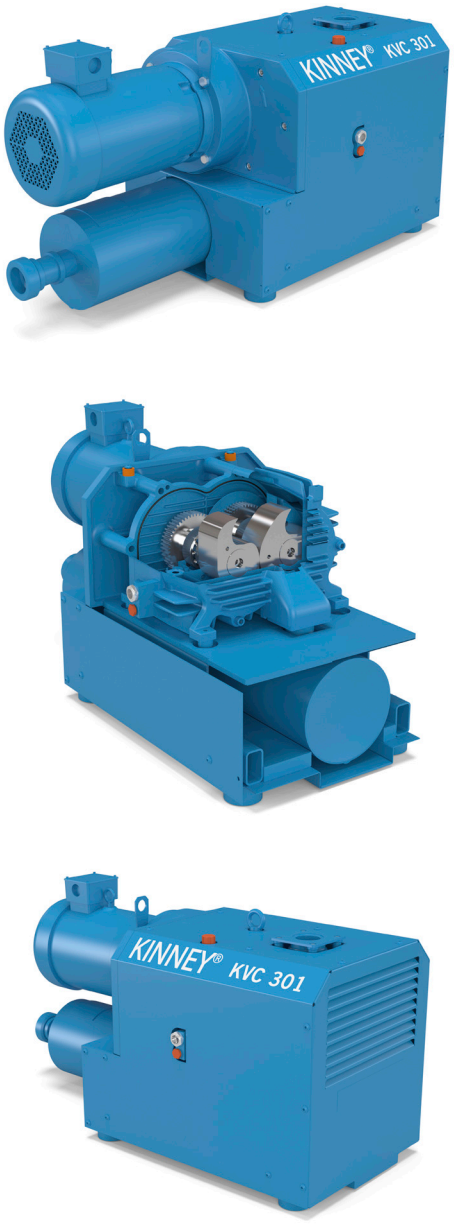

KVC301 model in various angles.

Engineered to Order Systems

Kinney application engineers help you select the best system and combination of components for your specific needs. With the combination of Kinney vacuum boosters, used to “supercharge” vacuum pumps, this provides much faster pumping speeds that significantly reduce pump down time and deeper vacuum for your needs.

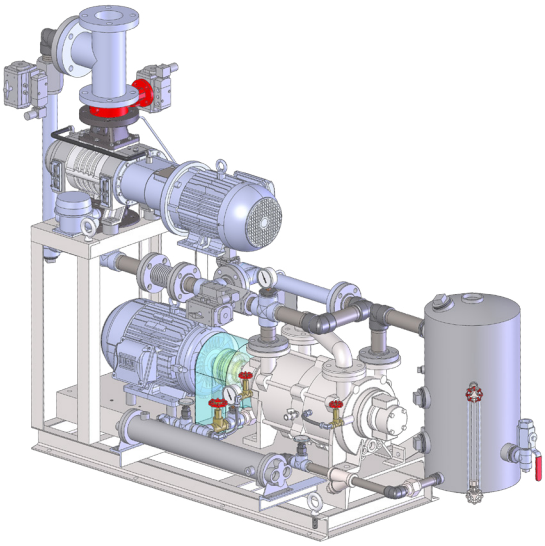

Kinney Vacuum KV Lubrication

Kinney boosters and vacuum pumps are known worldwide for superior quality and performance. KV 150 full synthetic bearing and gear lubricants are specifically formulated for use in Kinney Rotary Claw Vacuum Pumps and is the only lubricant we recommend.

Service and Repair

MD-Kinney Springfield, Missouri, USA is here to help. Call 1-800-825-6937 or visit us online at www.md-kinney.com to be connected to a MD-Kinney application engineer.

MD-Kinney also has a network of Authorized Service Centers offering local support to our customers. All centers are staffed with factory-trained personnel to ensure your equipment performs to factory specifications. KVC Series repairs are only available via an Authorized Service Center.

To find your nearest Authorized Service Center call us directly at 1-800-825-6937.

KINNEY®

CONTACT US

Kinney
4840 W. Kearney Street
Springfield, MO 65803
Phone: (800) 825-6937

LOCAL CONTACT:

www.kinneyvacuum.com

K-BC-KVC 1st Ed. 6/21